Measurement and Instrumentation - BECS 22442

Supplementary list of problems

Tutorial # 02

1. An instrumentation amplifier (in-amp) is a differential amplifier (diff-amp) designed to amplify the difference in input signals, making it particularly well-suited for precise measurements in various applications and test equipment.
   (a) State three key characteristics that distinguish an in-amp from a diff- amp.

   (b) A general version of the diff-amp circuit is shown in Figure 1.

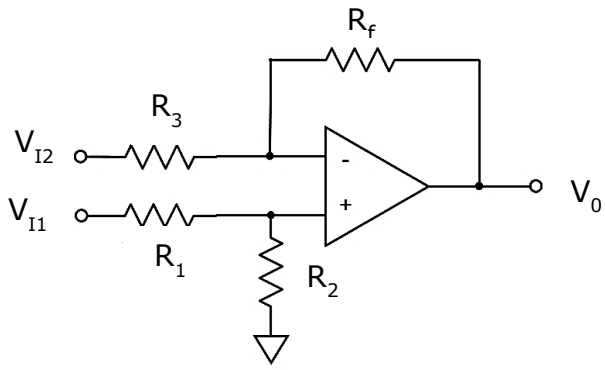

Figure 1

   (i) Show that the output voltage of the diff-amp is given by,

$$V_0 = V_{I1}\left(\frac{R_2}{R_1 + R_2}\right)\left(1 + \frac{R_f}{R_3}\right) - V_{I2}\left(\frac{R_f}{R_3}\right).$$

   (ii) If the given diff-amp behaves as a true diff-amp, determine the interrelation between resistances R_1, R_2, R_3, and R_f.

   (c) Consider the circuit diagram of an in-amp shown in Figure 2. Using the superposition theorem derive the expression for its output voltage(V_0).

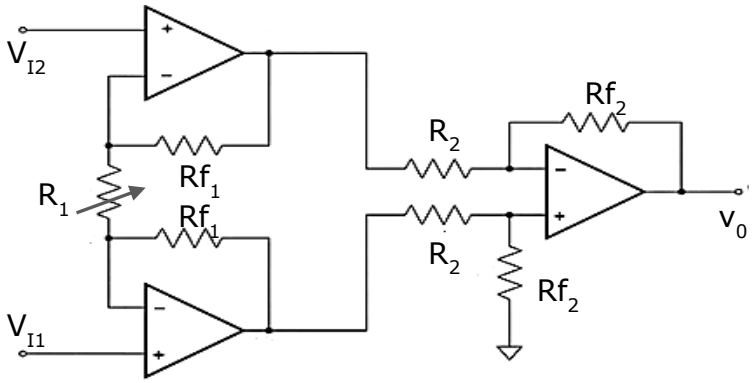

Figure 2

   (d) Design an in- amp which has a differential voltage gain 40 dB and a zero common mode gain. Assume that the differential gain should equally distributed between the first and second stages.

2. Figure 3 shows the circuit diagram of a differential output amplifier. This circuit has two output voltages which have opposite polarities.

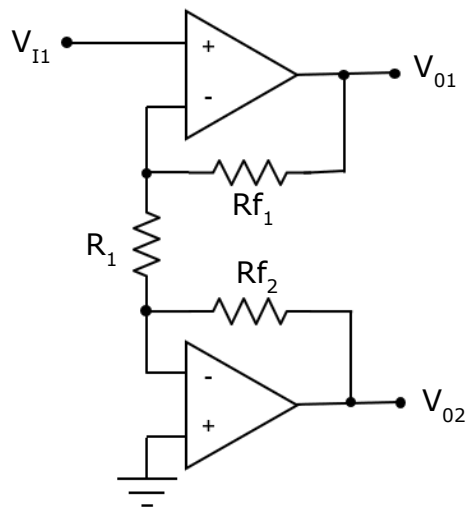

Figure 3

(a) Show that the output voltage of the differential output amplifier is given by,

$$V_0 = V_{01} - V_{02} = \left(\frac{2R_f}{R_1}\right) V_{I1}.$$

(b) Design a balanced differential output amplifier with an open-circuit voltage gain of 4, an input resistance (R_i) of 10 kΩ, and a balanced output resistance of 600 Ω. Assume that the amplifier is to drive a 600 Ω load. If the maximum peak output voltage from each op-amp is ±12 V, calculate the maximum peak load voltage.

3. Consider the schematic shown in Figure 4, which represents the so-called two-op-amp differential amplifier.

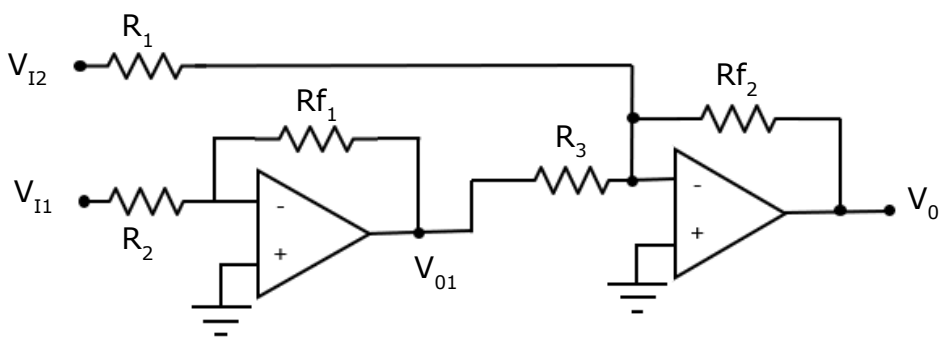

Figure 4

Measurement and Instrumentation - BECS 22442

Supplementary list of problems

(a) State two major advantages of the two-op-amp differential amplifier over the single-op-amp differential amplifier.

(b) Using the superposition theorem show that the output voltage of the two-op-amp differential amplifier is given by,

$$V_0 = \frac{R_{f1}R_{f2}}{R_1R_3}V_{I1} - \frac{R_{f2}}{R_2}V_{I2} \cdot$$

(c) If the given two-op-amp differential amplifier behaves as a true diff-amp, determine the interrelation between resistances R_1, R_2, R_3, R_{f1} and R_{f2}.

Due date – 23rd of December 2024